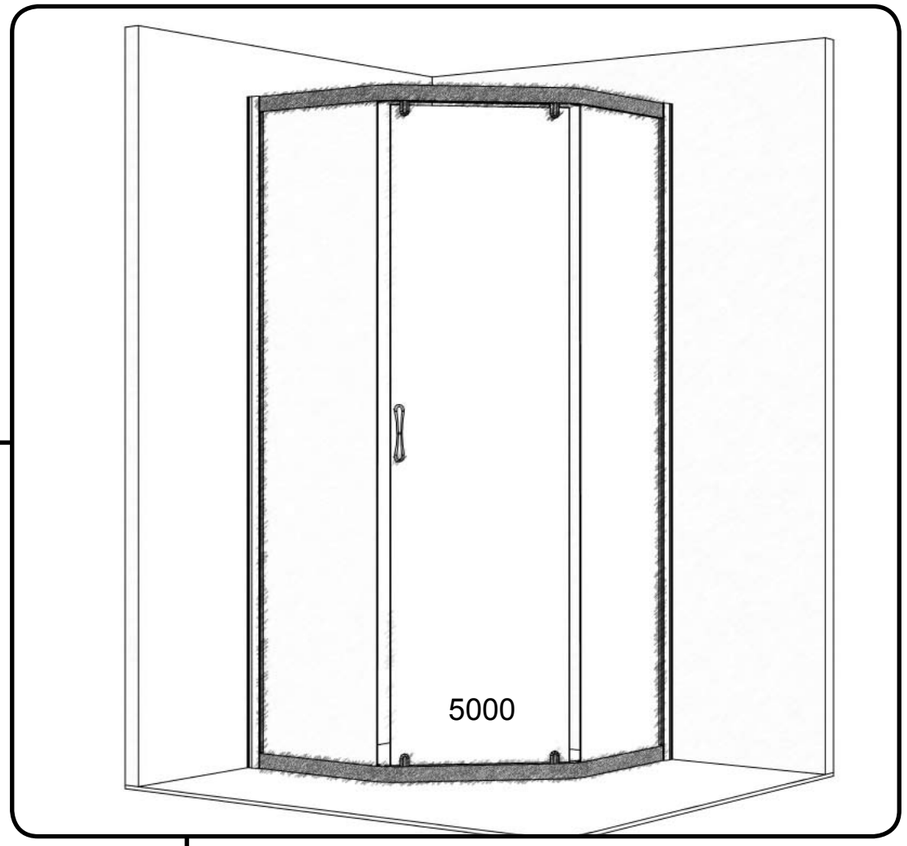
5000

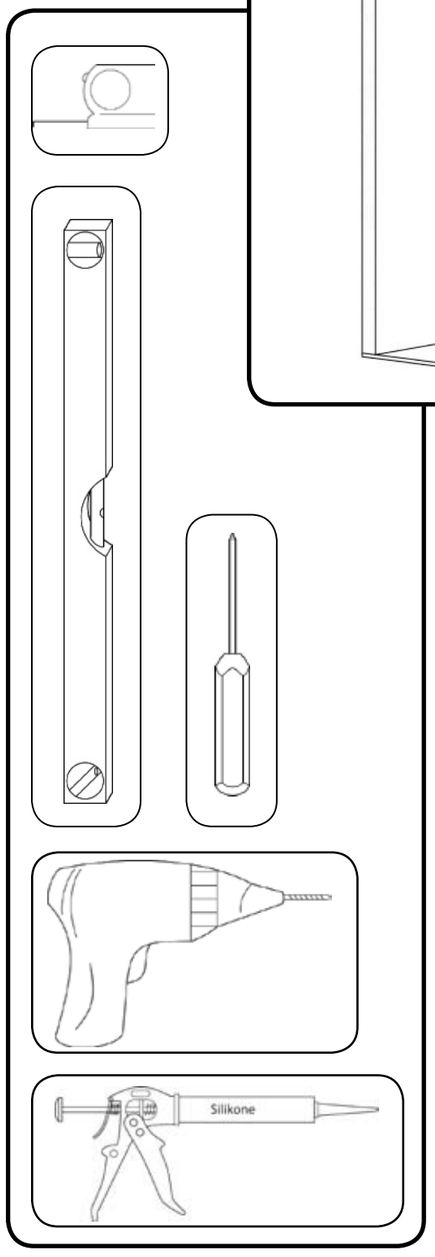
Silikone

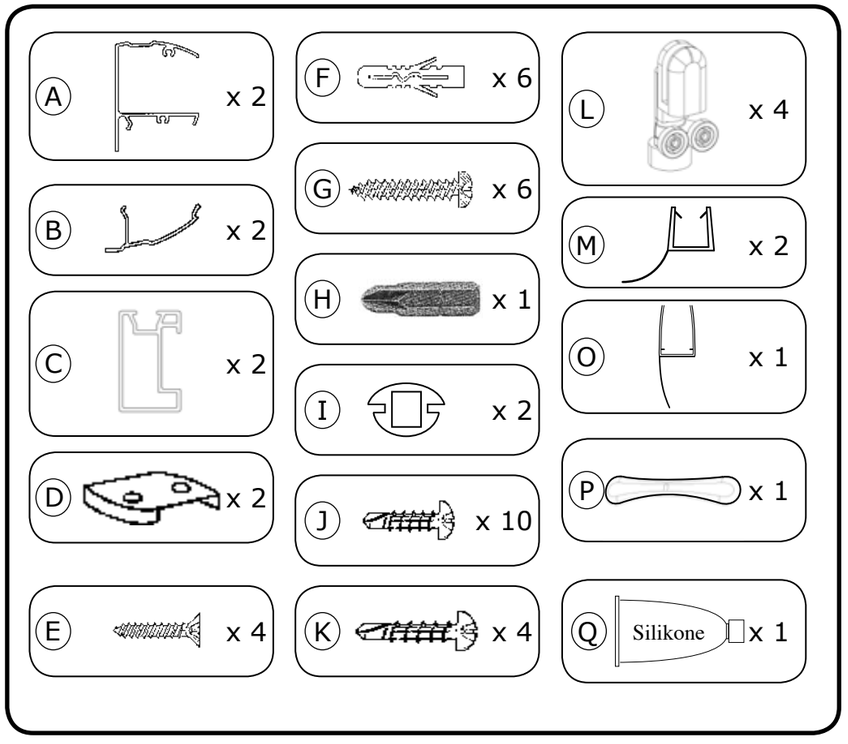
A x 2
B x 2
C x 2
D x 2
E x 4
F x 6
G x 6
H x 1
I x 2
J x 10
K x 4
L x 4
M x 2
O x 1
P x 1
Q Silikone x 1

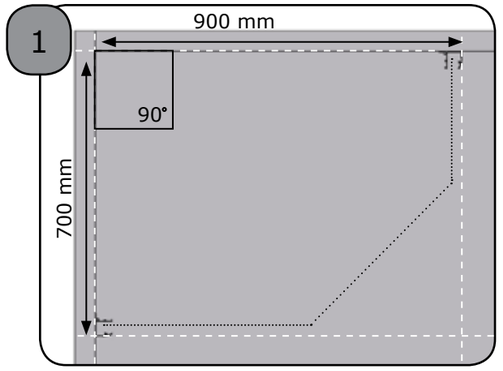
1
900 mm
90°
700 mm

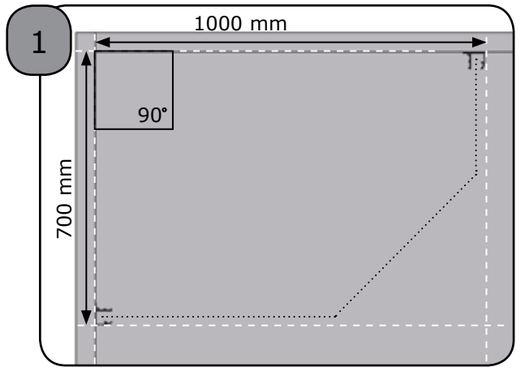
1
1000 mm
90°
700 mm

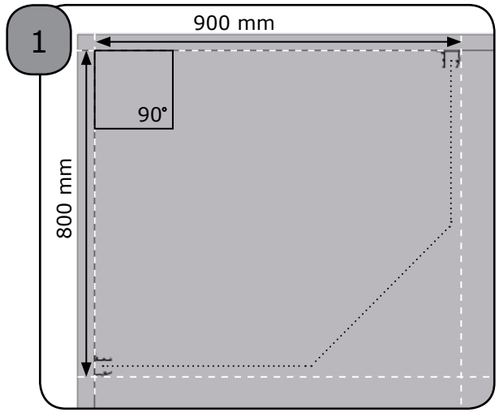
1
900 mm
90°
800 mm

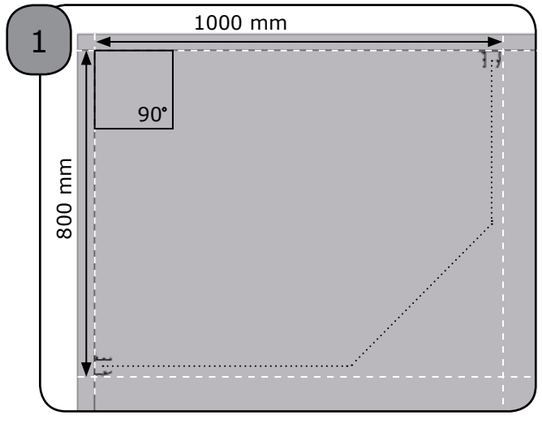
1
1000 mm
90°
800 mm

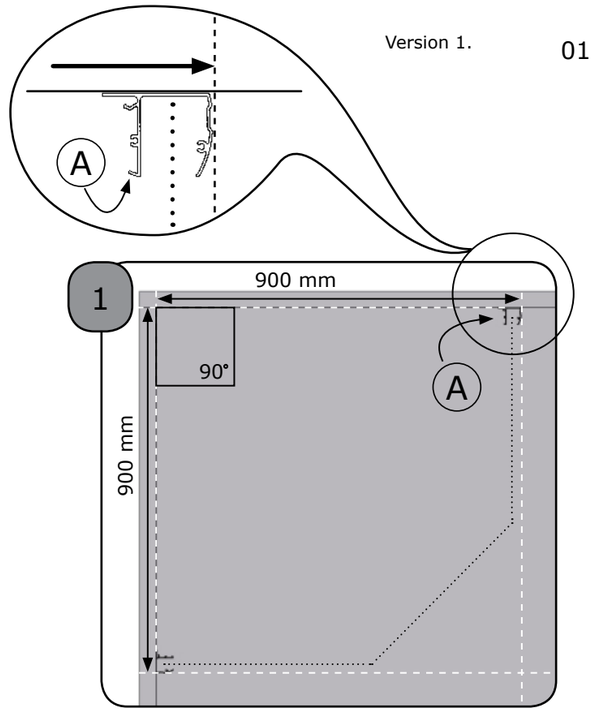
A
1
900 mm
90°
A
900 mm

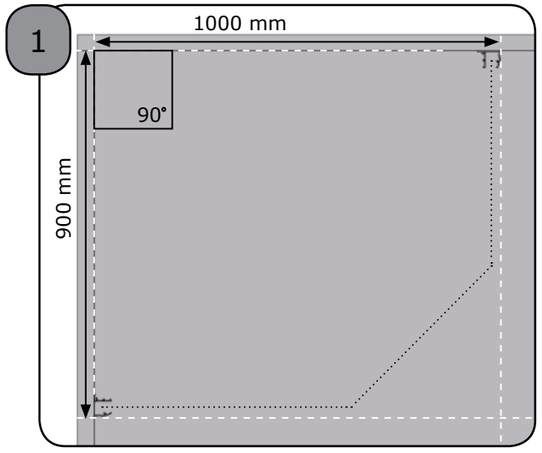
1
1000 mm
90°
900 mm

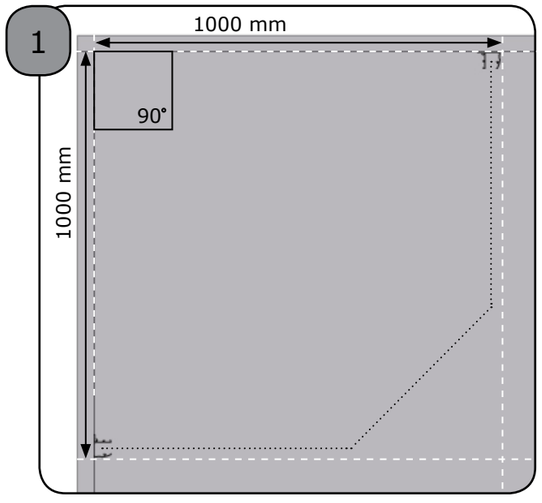
1
1000 mm
90°
1000 mm

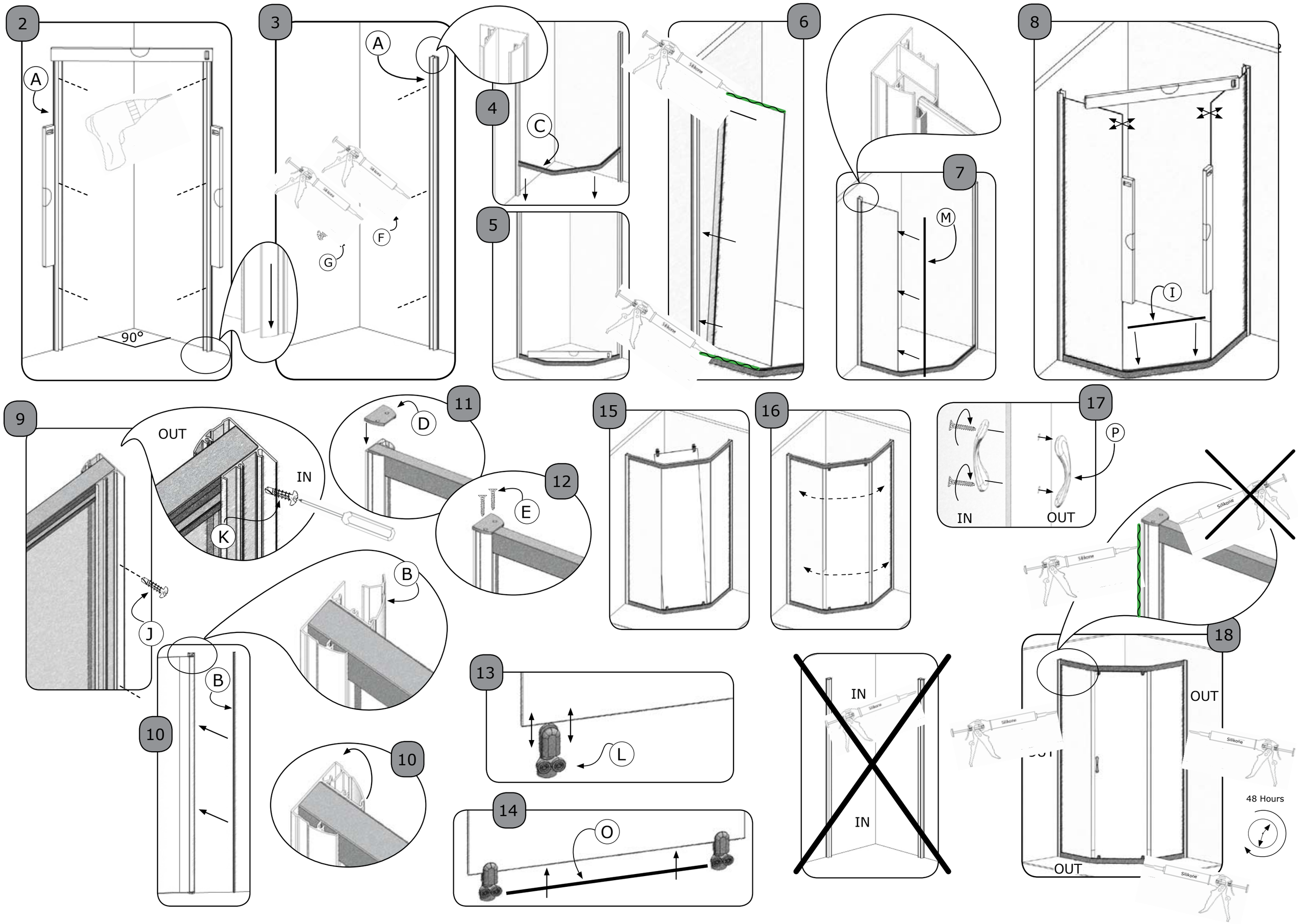
2
A
90°
3
A
F
G
4
C
5
6
7
M
8
I
9
OUT
IN
K
J
10
B
10
B
11
D
12
E
13
L
14
O
15
16
17
P
IN
OUT
18
Silikone
IN
IN
OUT
OUT
48 Hours