Version 1.

01

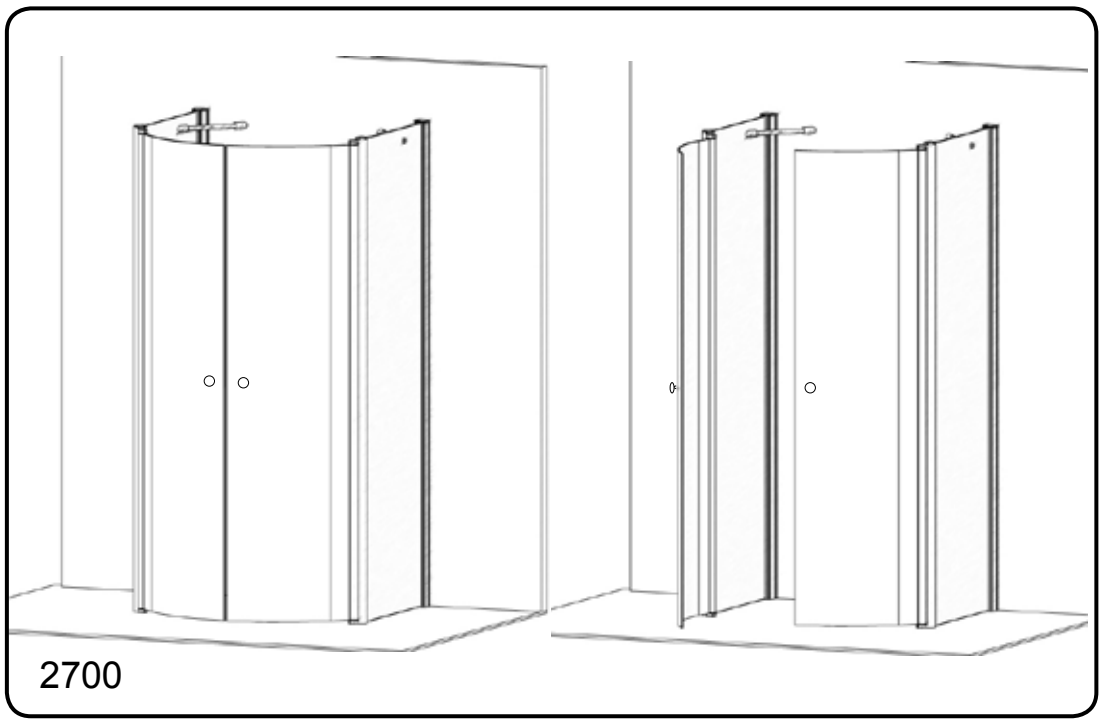
2700

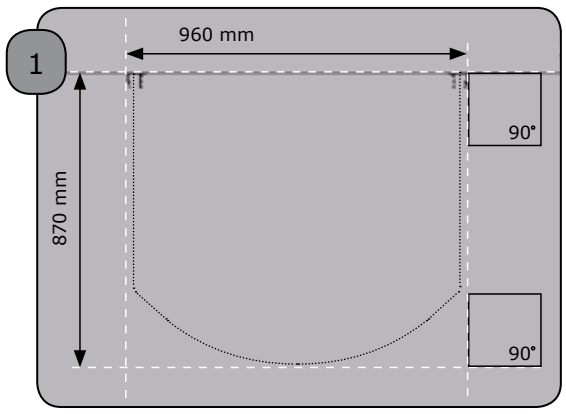
1
960 mm
870 mm
90°
90°

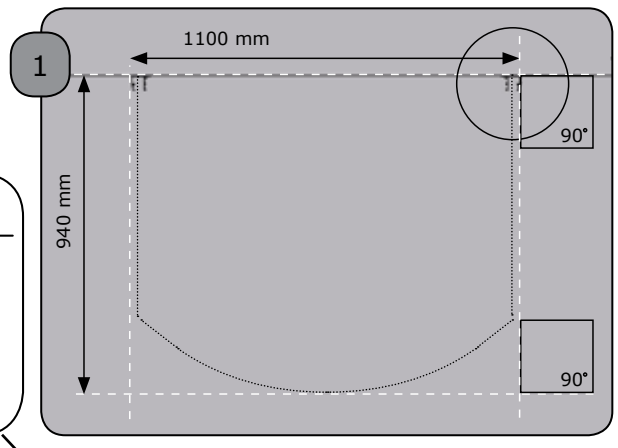
1
1100 mm
940 mm
90°
90°

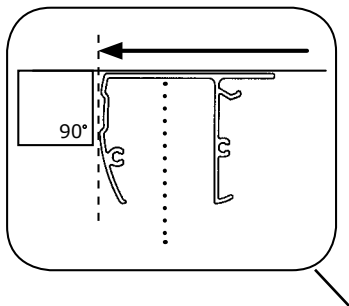
90°

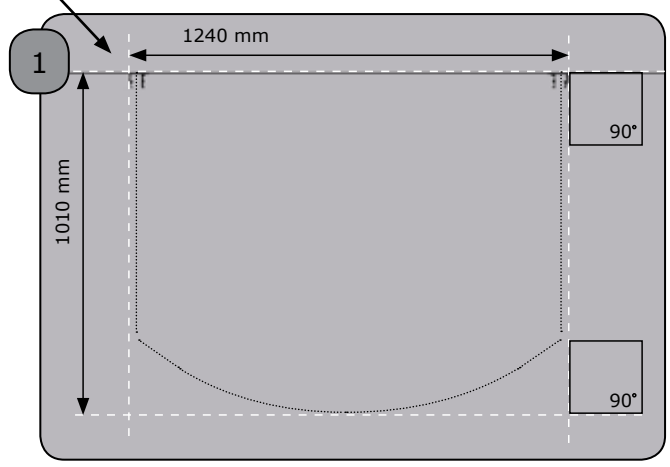
1
1240 mm
1010 mm
90°
90°

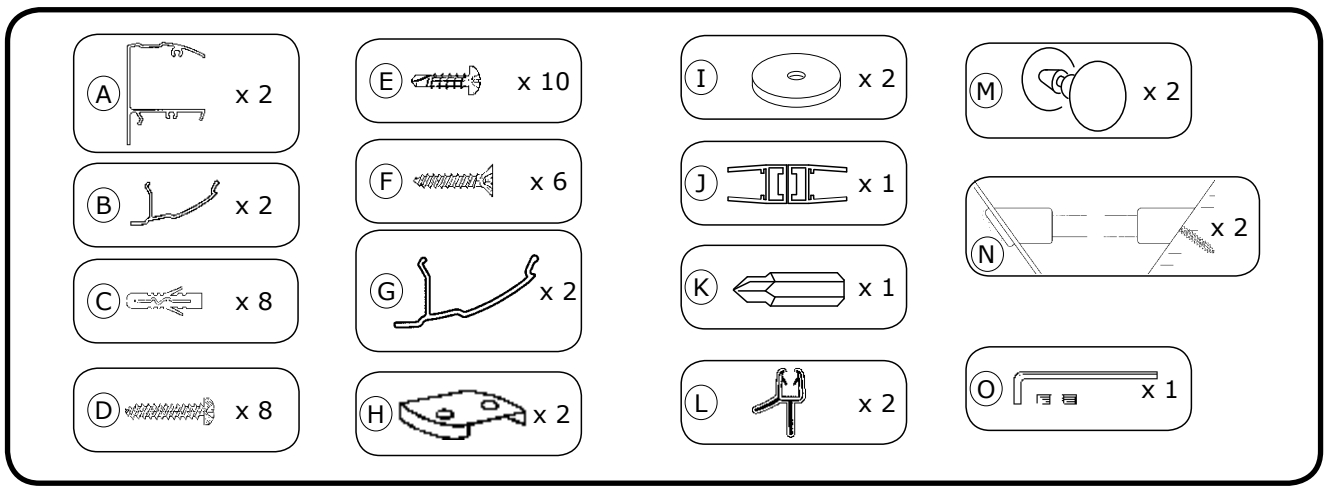
A x 2
B x 2
C x 8
D x 8
E x 10
F x 6
G x 2
H x 2
I x 2
J x 1
K x 1
L x 2
M x 2
N x 2
O x 1

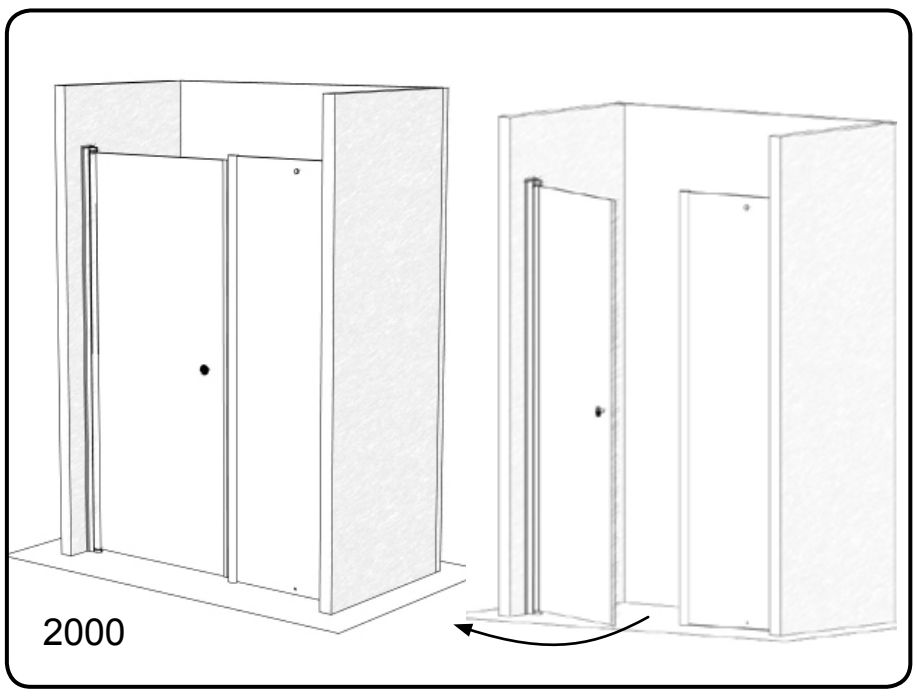
2000

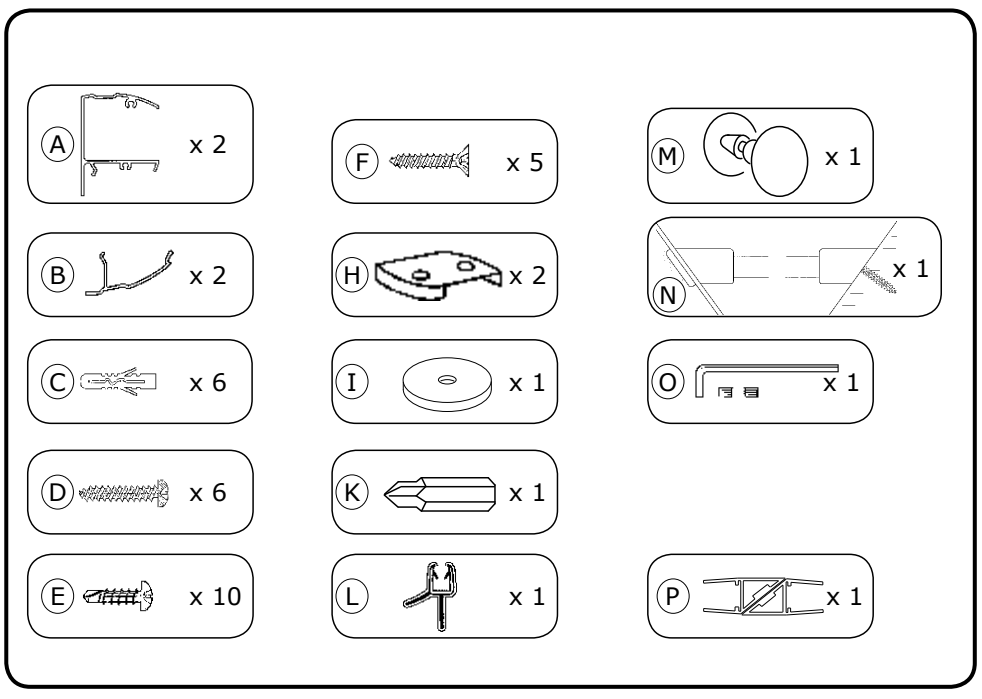
A x 2
B x 2
C x 6
D x 6
E x 10
F x 5
H x 2
I x 1
K x 1
L x 1
M x 1
N x 1
O x 1
P x 1

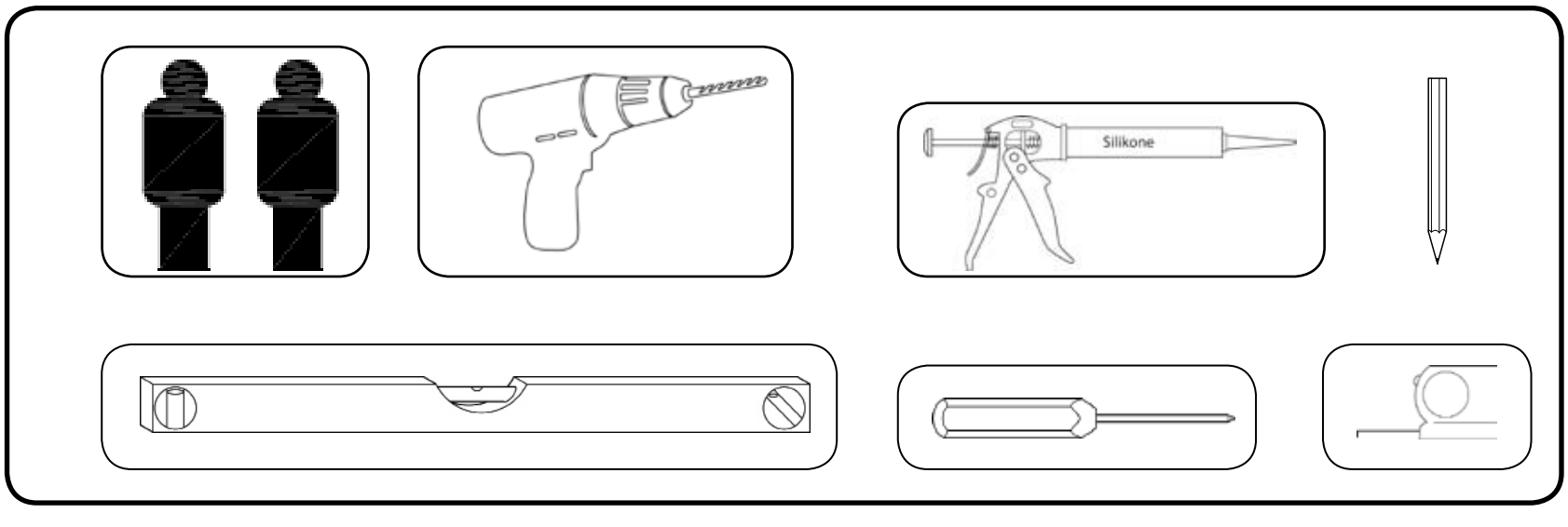
Silikone

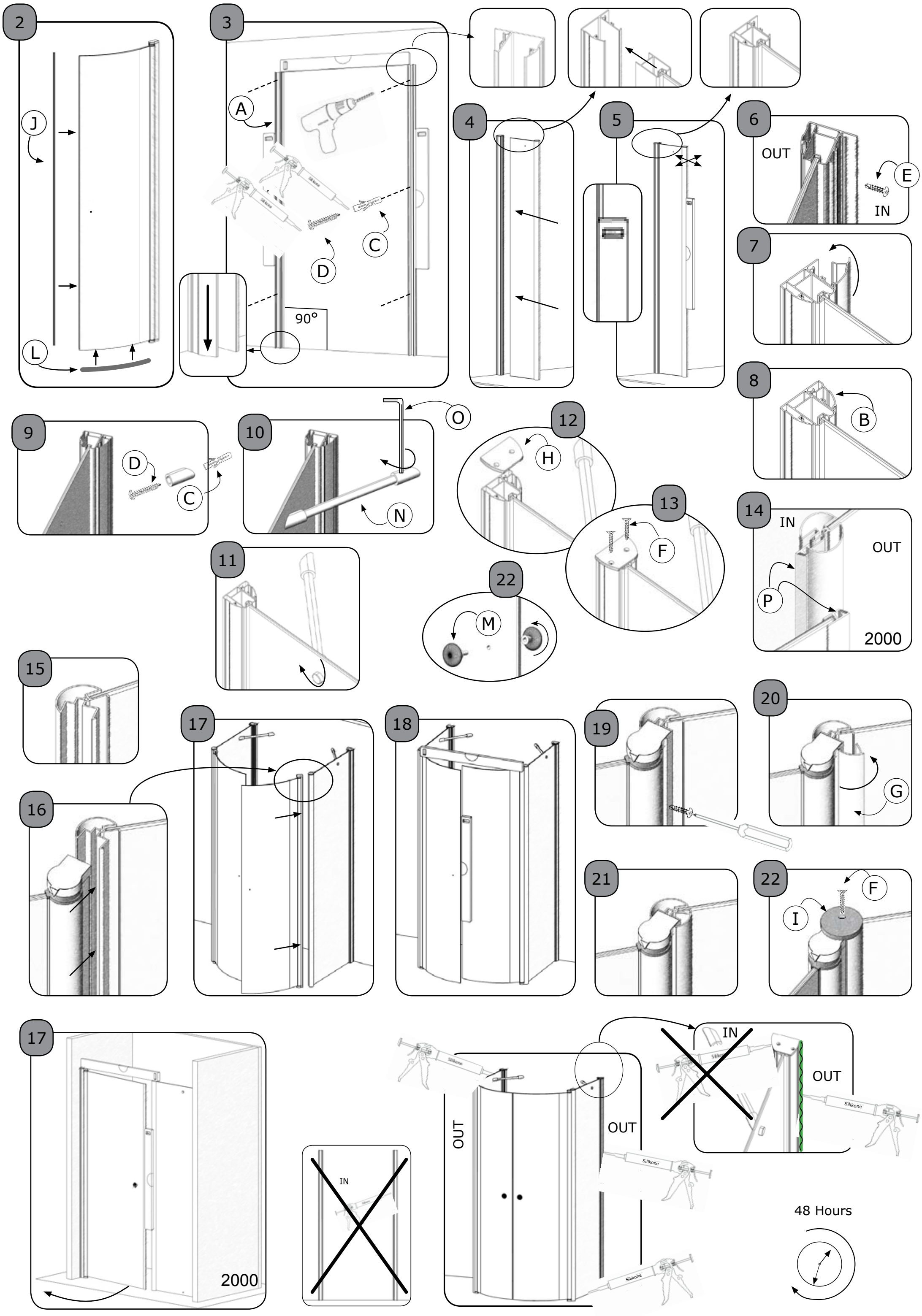
2
J
L
3
A
C
D
90°
4
5
6
OUT
E
IN
7
8
B
9
D
C
10
O
N
12
H
13
F
14
IN
OUT
P
2000
11
22
M
15
16
17
18
19
20
G
21
22
F
I
17
2000
IN
OUT
OUT
IN
OUT
Silikone
48 Hours